DBL4903-WX

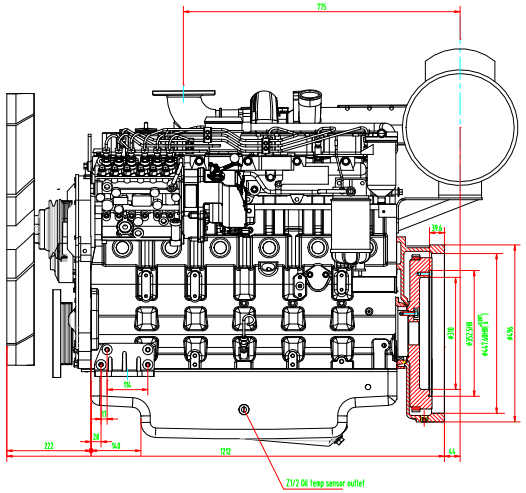

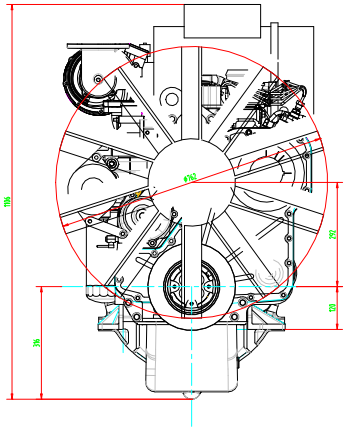

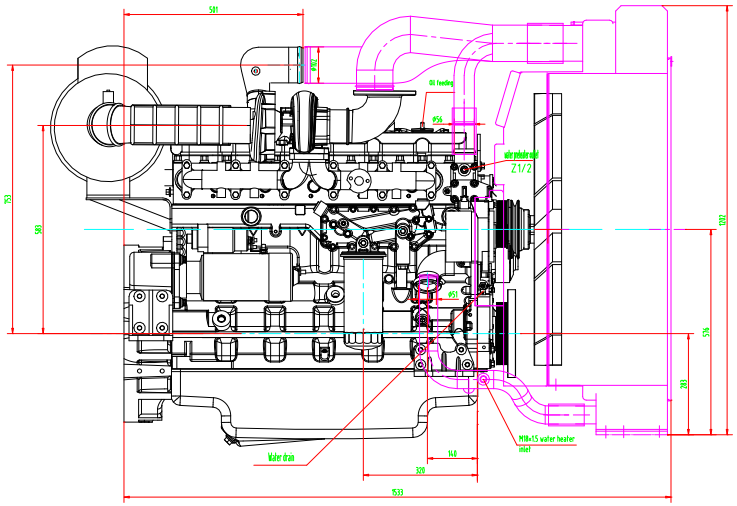

A (fuel connector)
1 : 1

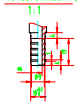

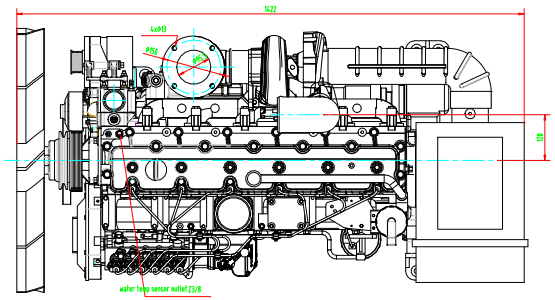

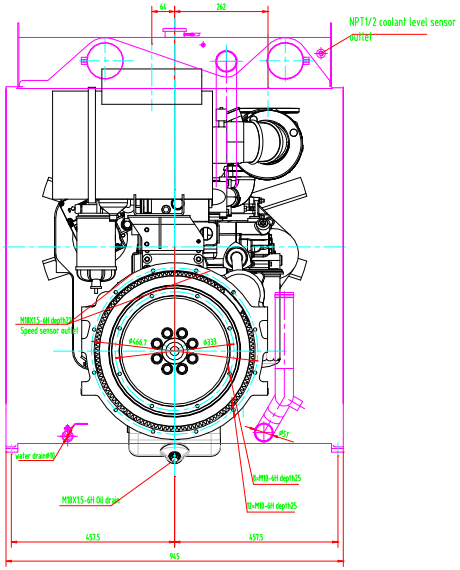

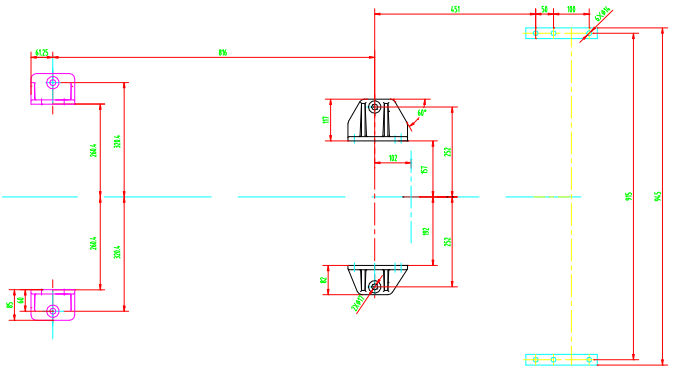

Dwg No. DBL4903-WX