DBL3678-WX

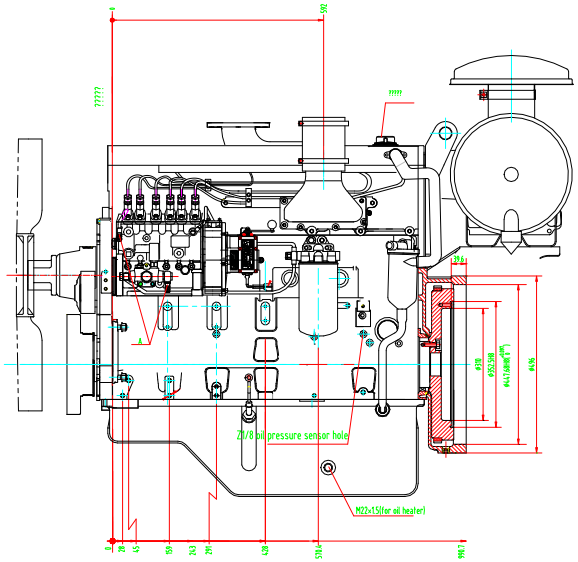

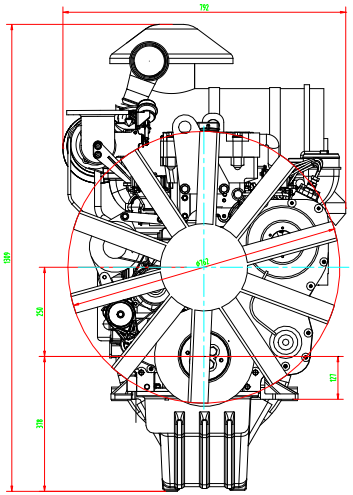

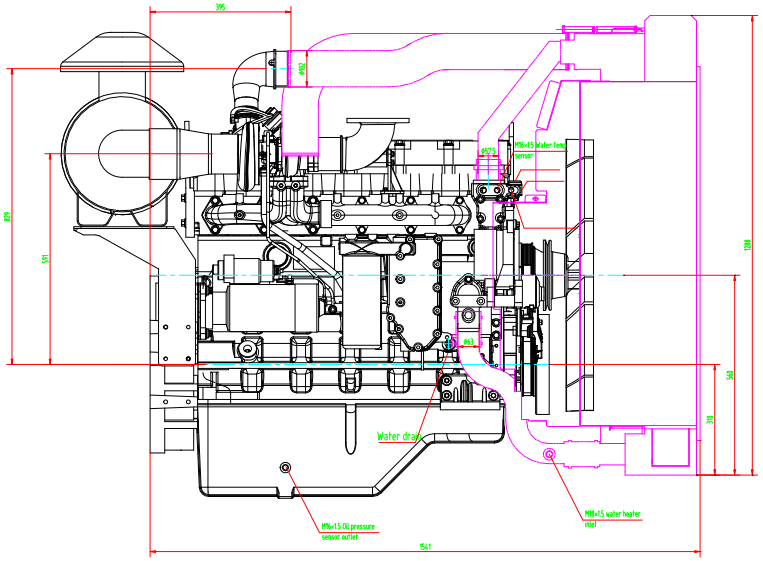

A (Fuel connector)
1 : 1

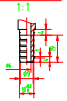

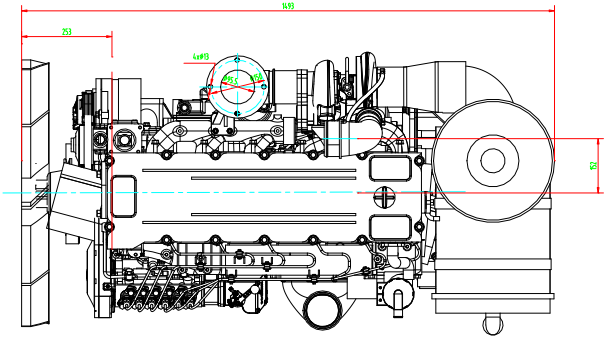

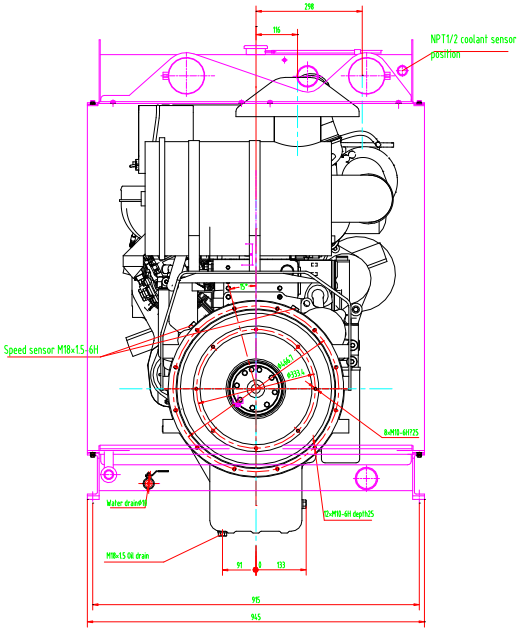

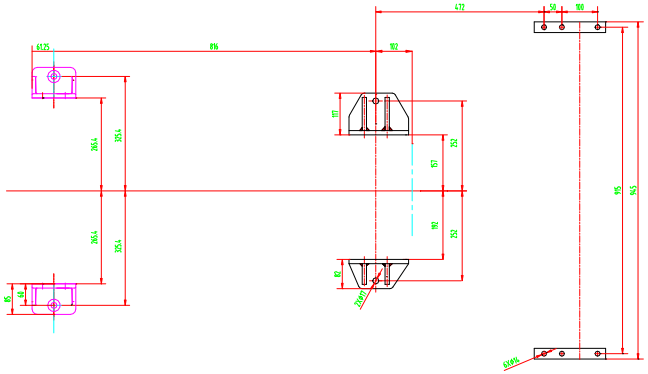

DBL3678-WX